DVS-T83 *Series*

DESIGNER *Series*

Nested Tablet Designer Chair
with a Touch of Class

Décor Viz System
www.decorviz.com.sg

DVS-T83 *Series*

DESIGNER *Series*

FEATURES

Designed for Maximum Flexibility & Convenience

CAN BE NESTED

SPECIFICATIONS

Product Size

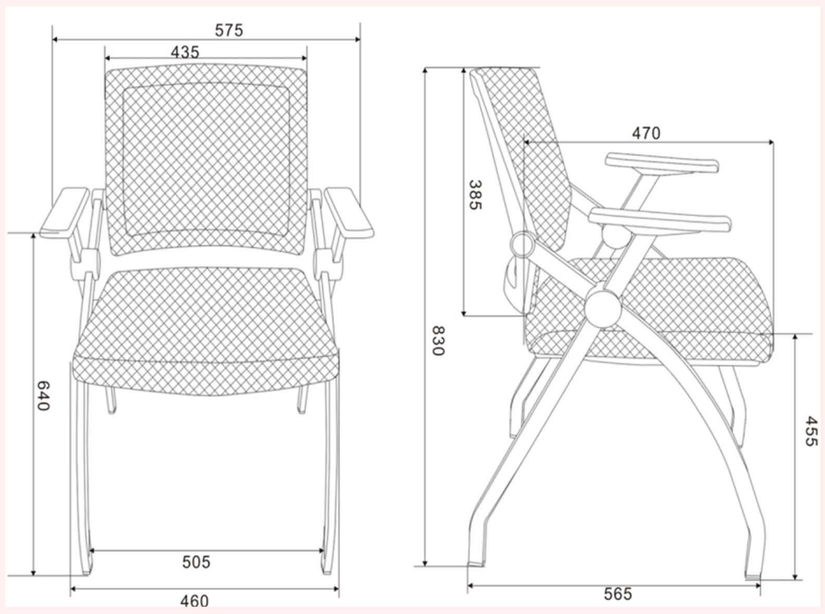

Upholstery
. Ultra Comfortable Micro Mesh
. Breathable Foam for Seat

Colour Selection

Showrooms

Northlink : 10 Admiralty Street #01-79 Northlink Building S(757695)
(T) 6753 7877 (F) 6481 7877

UBI : 81 Ubi Avenue 4 #01-24/25/26 UB. 1 S(408830)
(T) 6636 2812 (F) 6604 9855

E-Mail : sales@decorviz.com.sg

Décor Viz System
www.decorviz.com.sg