DVS-X2-03 *Series*

DESIGNER
Series

CONTEMPORARY Designer Chair
with a Touch of Class

Décor Viz System
www.decorviz.com.sg

DVS-X2-03 *Series*

DESIGNER
Series

Available with wheels

Finest Quality
with
Innovative Design

DVS-X2-03 *Series*

DESIGNER
Series

FEATURES

Designed for
Maximum
Flexibility &
Convenience

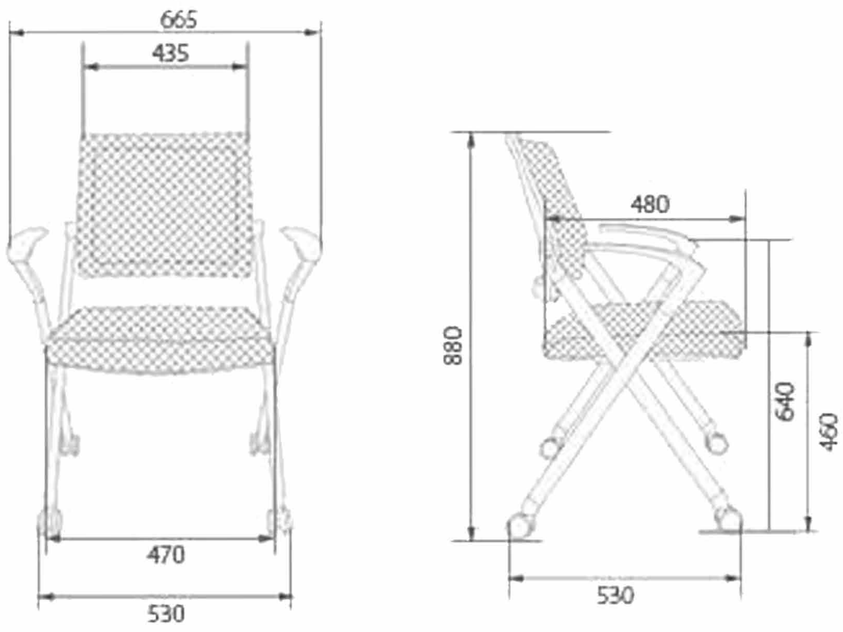

SPECIFICATIONS

Overall Dimension
W:665mm D:530mm H:880mm

Seat Dimension
W:470mm D:480mm H:880mm

Upholstery
. Ultra Comfortable Micro Mesh
. Breathable Foam for Seat

Colour Selection
. Mesh : Black

Showrooms
Northlink : 10 Admiralty Street #01-79 Northlink Building S(757695)
(T) 6753 7877 (F) 6481 7877

UBI : 81 Ubi Avenue 4 #01-26 UB. 1 S(408830)
(T) 6636 2812 (F) 6604 9855

E-Mail : sales@decorviz.com.sg

Décor Viz System
www.decorviz.com.sg